DATE REVISED: 1/29/03

CATALOG NUMBER	"L" LENGTH
0119–770–1–TAB	SEE CHART

TAB EQUALS "L" X 10^3 IN.

LENGTH CHART
.030
.035
.040
.045
.050
.055
.060
.065
.070
.075
.080
.085
.090
.095
.100
.105
.110
.115
.120
.125
.130
.135

HOUSING AND CENTER CONTACT: IRON–NICKEL–COBALT SEALING ALLOY (KOVAR) PER ASTM F 15; GOLD PLATE

DIELECTRIC: CORNING 7070 GLASS

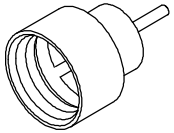

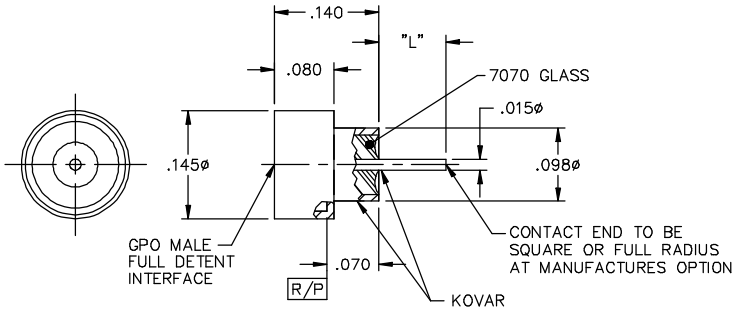

RECOMMENDED MOUNTING HOLE

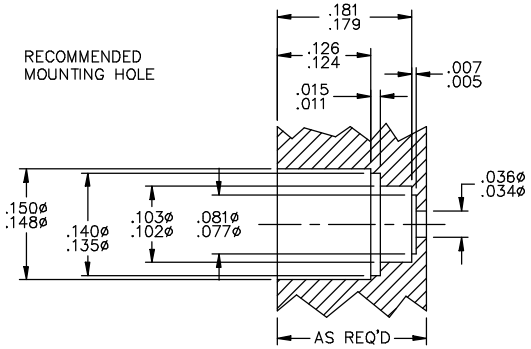

This drawing and any data contained herein is the property of Corning Gilbert Inc., and constitutes and contains proprietary and confidential information. Neither receipt nor possession of this drawing confers or transfers any right to duplicate, use or disclose any information contained herein except as expressly authorized by Corning Gilbert Inc.

GPO MALE FULL DETENT SOLDER–IN HERMETIC SHROUD	IDENT CODE: 82316	Corning Gilbert Inc.
	REVISION: K	

SOURCE FILE: MECR# 878	DWG. NO.: OL–0119–770–1–TAB	ASSY. PROC.: –